803BB, 234BB & 834BB Series
Shower Door Pull

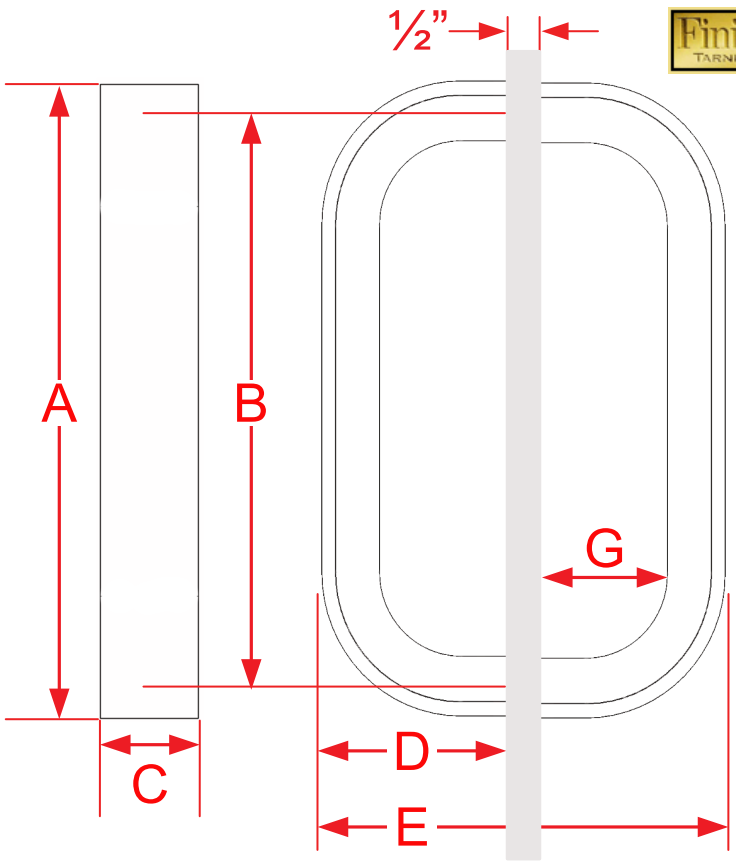

Finishes for Life
TARNISH-FREE GUARANTEED

Cross Section
CAD View

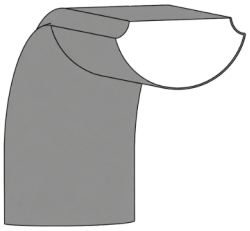

	A	B	C	D	E	F	G
Part #	Overall Height	Center to Center	Handle Width	Projection	Overall Width (1/2" Glass)	Base Width	Clearance
234BB-6	6 1/2"	6"	1"	2"	4 1/2"	1/2"	1 1/2"
234BB-8	8 1/2"	8"	1"	2"	4 1/2"	1/2"	1 1/2"
234BB-10	10 1/2"	10"	1"	2"	4 1/2"	1/2"	1 1/2"
234BB-12	12 1/2"	12"	1"	2"	4 1/2"	1/2"	1 1/2"
234BB-18	18 1/2"	18"	1"	2"	4 1/2"	1/2"	1 1/2"
234BB-24	24 1/2"	24"	1"	2"	4 1/2"	1/2"	1 1/2"
Custom sizing available from 4 1/2" up to 24 1/2" overall height						Page 1 of 3	

Colonial Bronze Co.

Manufacturing Fine Architectural Hardware
in the USA Since 1927

CERTIFIED RECYCLED CONTENT
MINIMUM 94% RECYCLED CONTENT PRE-CONSUMER

Made in the USA

Copyright 2024
Colonial Bronze Company
All rights reserved
www.colonialbronze.com
860.489.9233

803BB, 234BB & 834BB Series
Shower Door Pull

Finishes for Life
TARNISH-FREE GUARANTEED

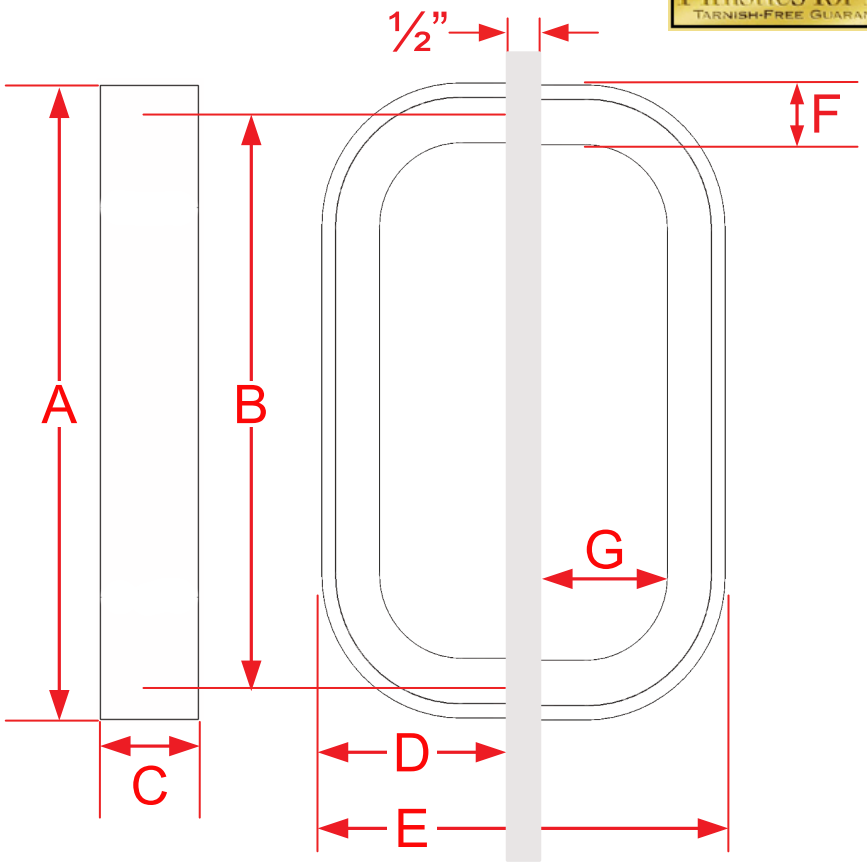

Cross Section
CAD View

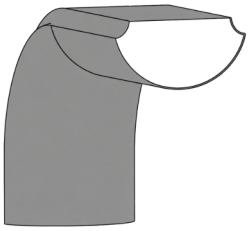

Part #	A Overall Height	B Center to Center	C Handle Width	D Projection	E Overall Width (1/2" Glass)	F Base Width	G Clearance
803BB-6	6 5/16"	6"	5/8"	1"	2 1/2"	5/16"	11/16"
803BB-8	8 5/16"	8"	5/8"	1"	2 1/2"	5/16"	11/16"
803BB-10	10 5/16"	10"	5/8"	1"	2 1/2"	5/16"	11/16"
803BB-12	12 5/16"	12"	5/8"	1"	2 1/2"	5/16"	11/16"
803BB-18	18 5/16"	18"	5/8"	1"	2 1/2"	5/16"	11/16"
Custom sizing available from 4 5/16" up to 25 5/16" overall height						Page 2 of 3	

Colonial Bronze Co.

Manufacturing Fine Architectural Hardware
in the USA Since 1927

CERTIFIED RECYCLED CONTENT
MINIMUM 94% RECYCLED CONTENT PRE-CONSUMER

Made in the USA

Copyright 2024
Colonial Bronze Company
All rights reserved
www.colonialbronze.com
860.489.9233

803BB, 234BB & 834BB Series
Shower Door Pull

Finishes for Life
TARNISH-FREE GUARANTEED

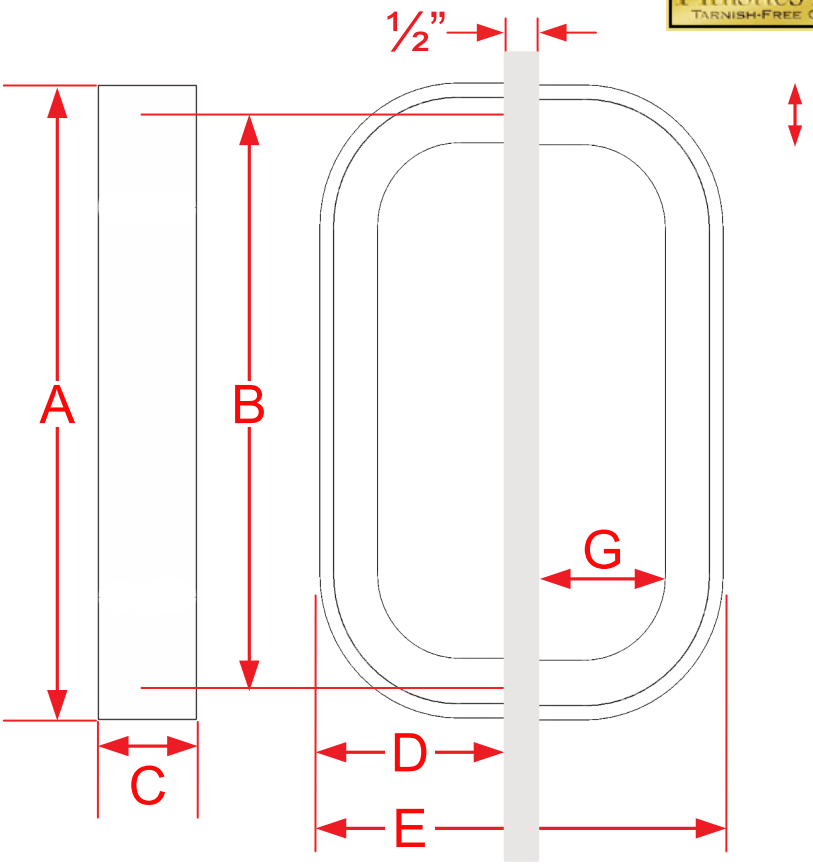

Cross Section
CAD View

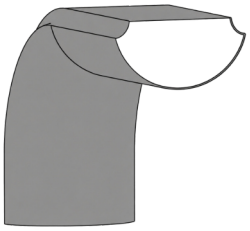

	A	B	C	D	E	F	G
Part #	Overall Height	Center to Center	Handle Width	Projection	Overall Width (1/2" Glass)	Base Width	Clearance
834BB-6	6 1/2"	6"	1"	1 5/8"	3 3/4"	1/2"	1 1/8"
834BB-8	8 1/2"	8"	1"	1 5/8"	3 3/4"	1/2"	1 1/8"
834BB-10	10 1/2"	10"	1"	1 5/8"	3 3/4"	1/2"	1 1/8"
834BB-12	12 1/2"	12"	1"	1 5/8"	3 3/4"	1/2"	1 1/8"
834BB-18	18 1/2"	18"	1"	1 5/8"	3 3/4"	1/2"	1 1/8"
834BB-24	24 1/2"	24"	1"	1 5/8"	3 3/4"	1/2"	1 1/8"
Custom sizing available from 4 1/2" up to 24 1/2" overall height						Page 3 of 3	

Colonial Bronze Co.

Manufacturing Fine Architectural Hardware
in the USA Since 1927

CERTIFIED RECYCLED CONTENT
MINIMUM 94% RECYCLED CONTENT PRE-CONSUMER

Made in the USA

Copyright 2024
Colonial Bronze Company
All rights reserved
www.colonialbronze.com
860.489.9233